00 5/6/96 RELEASED CP

REV-LINESP
REV-LINESP

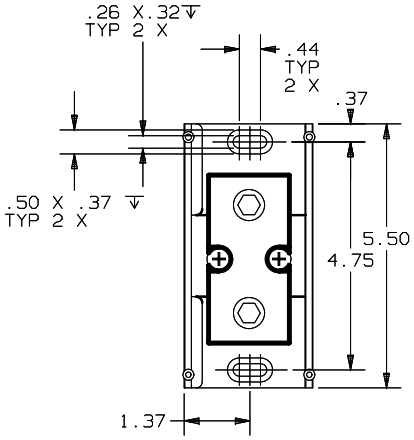

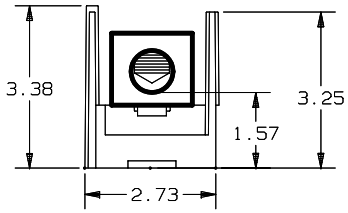

P/N	WIRE RANGE & TORQUE (IN-LBS)				UL		CSA
	PRIMARY		SECONDARY				
	RANGE	TORQUE	RANGE	TORQUE	FILE #	GUIDE #	REPORT #
68051	500-#4	500-#4 375	500-#4	500-#4 375	E73571	XCFR2	LR69363
69051	500-#6	500-#4 500	500-#6	500-#4 500	E73571	XCFR2	LR15469

BP

3. "SOCKET SIZE" NOTE (3/8 FOR 68, 7/16 FOR 69)
2. (2) 500 MCM-#4 X (1) 500 MCM - #4
   1 POLE, 600V.
1. MATERIAL COMPOSITION AND RATING:
   BASE - THERMOPLASTIC 125°C RTI
   CONNECTOR - ALUMINUM OR COPPER ALLOY
   W/TIN PLATE.

NOTES: UNLESS OTHERWISE SPECIFIED

P/N 68051 (CU ONLY)
P/N 69051 (AL-CU)

CEP 2/96

PDB, (1)500 X (1)500 05B0528 00